2/3/4/5-Phase PWM Controller for High-Density Power Supply

General Description

The RT8802A is a 2/3/4/5-phase synchronous buck controller specifically designed to power Intel®/ AMD next generation microprocessors. It implements an internal 8-bit DAC that is identified by VID code of microprocessor directly. RT8802A generates VID table that conform to Intel® VRD10.x and VRD11 core power with 6.25mV increments and 0.5% accuracy.

RT8802A adopts innovative time-sharing DCR current sensing technique to sense phase currents for phase current balance, load line setting and over current protection. Using a common GM to sense all phase currents eliminates offset and linearity variation between GMs in conventional current sensing methods. As sub-milli-ohm-grade inductors are widely used in modern motherboards, slight offset and linearity mismatch will cause considerable current shift between phases. This technique ensures good current balance in mass production.

Other features include over current protection, programmable soft start, over voltage protection, and output offset setting. RT8802A comes to a small footprint package with VQFN-40L 6x6.

Ordering Information

RT8802A □ □

- Package Type
  QV : VQFN-40L 6x6 (V-Type)
- Lead Plating System
  P : Pb Free
  Z : ECO (Ecological Element with Halogen Free and Pb free)

Note :

Richtek products are :

- RoHS compliant and compatible with the current requirements of IPC/JEDEC J-STD-020.
- Suitable for use in SnPb or Pb-free soldering processes.

Features

- **5V Power Supply**
- **2/3/4/5-Phase Power Conversion with Automatic Phase Selection**
- **8-bit VID Interface, Supporting Intel VRD11/VRD10.x and AMD K8, K8_M2 CPUs**
- **VR_HOT and VR_FAN Indication**
- **Precision Core Voltage Regulation**
- **Power Stage Thermal Balance by DCR Current Sensing**
- **Adjustable Soft-start**
- **Over Voltage Protection**
- **Adjustable Frequency and Typical at 300kHz per Phase**
- **Power Good Indication**
- **40-Lead VQFN Package**
- **RoHS Compliant and 100% Lead (Pb)-Free**

Applications

- Intel®/AMD New generation microprocessor for Desktop PC and Motherboard
- Low Output Voltage, High power density DC/DC Converters
- Voltage Regulator Modules

Pin Configurations

(TOP VIEW)

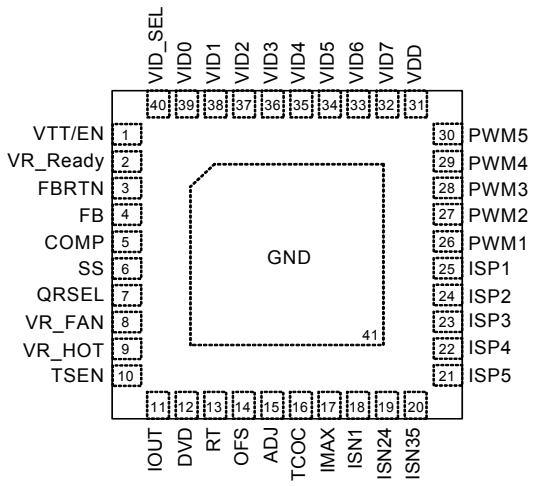

VQFN-40L 6x6

All brandname or trademark belong to their owner respectively

Marking Information

RT8802APQV

RT8802APQV : Product Number

YMDNN : Date Code

RT8802AZQV

RT8802AZQV : Product Number

YMDNN : Date Code

All brandname or trademark belong to their owner respectively

Typical Application Circuit

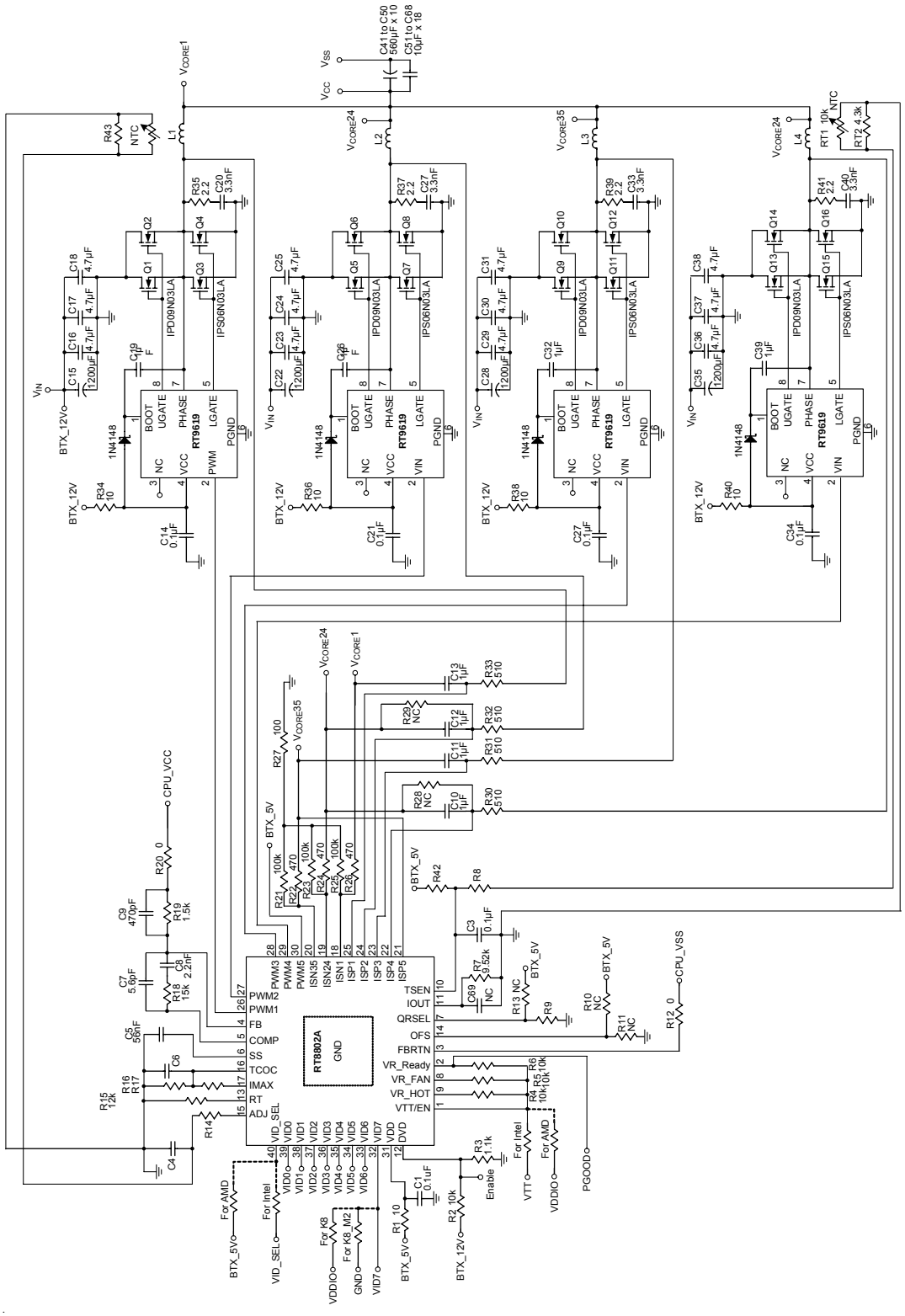

Functional Pin Description

VTT/EN (Pin 1)

The pin is defined as the chip enable, and the VTT is applied for internal VID pull high power and power sequence monitoring.

VR_Ready (Pin 2)

Power good open-drain output.

FBRTN (Pin 3)

Feedback return pin. VID DAC and error amplifier reference for remote sensing of the output voltage.

FB (Pin 4)

Inverting input pin of the internal error amplifier.

COMP (Pin 5)

Output pin of the error amplifier and input pin of the PWM comparator.

SS (Pin 6)

Connect this SS pin to GND with a capacitor to set the soft-start time interval.

QRSEL (Pin 7)

Quick response mode select pin. When QRSEL = GND and quick response is triggered during heavy load to light load transient, 2 channels will turn on simultaneously to prevent V_{OUT} undershoot. When QRSEL = NC and quick response is triggered, all channels will turn on simultaneously to prevent V_{OUT} undershoot.

VR_FAN (Pin 8)

The pin is defined to signal VR thermal information for external VR thermal dissipation scheme triggering.

VR_HOT (Pin 9)

The pin is defined to signal VR thermal information for external VR thermal dissipation scheme triggering.

TSEN (Pin 10)

Temperature detect pin for VR_HOT and VR_FAN.

IOUT (Pin 11)

Output current indication pin. The current through IOUT pin is proportional to the total output current.

DVD (Pin 12)

Programmable power UVLO detection input. Trip threshold is 1V at V_{DVD} rising.

RT (Pin 13)

The pin is defined to set internal switching operation frequency. Connect this pin to GND with a resistor R_{RT} to set the frequency F_{SW}.

$$F_{SW} = \frac{4.463\ e^9}{R_{RT} + 3500}$$

OFS (Pin 14)

The pin is defined for load line offset setting.

ADJ (Pin 15)

Current sense output for active droop adjusting. Connect a resistor from this pin to GND to set the load droop.

TCOC (Pin 16)

Input pin for setting thermally compensated over current trigger point. Voltage on the pin is compared with V_{ADJ}. If $V_{ADJ} > V_{TCOC}$ then OCP is triggered.

IMAX (Pin 17)

The pin is defined to set threshold of over current.

ISN1 (Pin 18)

Current sense negative input pin for channel 1 current sensing.

ISN24 (Pin 19)

Current sense negative input pins for channel 2 and channel 4 current sensing.

ISN35 (Pin 20)

Current sense negative input pins for channel 3 and channel 5 current sensing.

All brandname or trademark belong to their owner respectively

ISP1 (Pin 25), ISP2 (Pin 24), ISP3 (Pin 23), ISP4 (Pin 22), ISP5 (Pin 21)

Current sense positive input pins for individual converter channel current sensing.

PWM1 (Pin 26), PWM2 (Pin 27), PWM3 (Pin 28), PWM4 (Pin 29), PWM5 (Pin 30)

PWM outputs for each driven channel. Connect these pins to the PWM input of the MOSFET driver. For systems which using 2/3/4 channels, pull PWM 3/4/5 pins up to high.

VDD (Pin 31)

IC power supply. Connect this pin to a 5V supply.

VID7 (Pin 32), VID6 (Pin 33), VID5 (Pin 34), VID4 (Pin 35), VID3 (Pin 36), VID2 (Pin 37), VID1 (Pin 38), VID0 (Pin 39), VID_SEL (40)

DAC voltage identification inputs for VRD10.x / VRD11 / K8 / K8_M2. These pins are internally pulled up to VTT.

VIDSEL	VID [7]	Table
VTT	X	VR11
GND	X	VR10.x
VDD	NC	K8
VDD	GND	K8_M2

GND [Exposed pad (41)]

The exposed pad must be soldered to a large PCB and connected to GND for maximum power dissipation.

Function Block Diagram

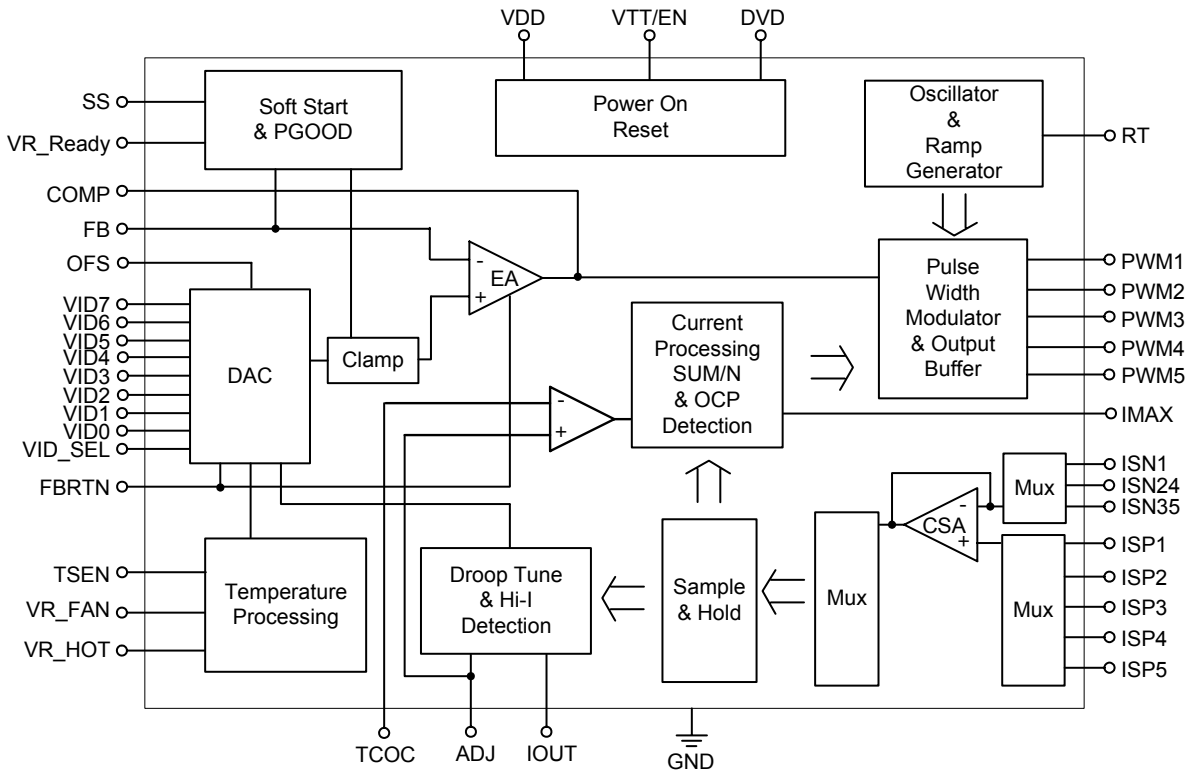

All brandname or trademark belong to their owner respectively

Table 1. Output Voltage Program (VRD10.x + VID6)

Pin Name							Nominal Output Voltage DACOUT
VID4	VID3	VID2	VID1	VID0	VID5	VID6	
0	1	0	1	0	1	1	1.60000V
0	1	0	1	0	1	0	1.59375V
0	1	0	1	1	0	1	1.58750V
0	1	0	1	1	0	0	1.58125V
0	1	0	1	1	1	1	1.57500V
0	1	0	1	1	1	0	1.56875V
0	1	1	0	0	0	1	1.56250V
0	1	1	0	0	0	0	1.55625V
0	1	1	0	0	1	1	1.55000V
0	1	1	0	0	1	0	1.54375V
0	1	1	0	1	0	1	1.53750V
0	1	1	0	1	0	0	1.53125V
0	1	1	0	1	1	1	1.52500V
0	1	1	0	1	1	0	1.51875V
0	1	1	1	0	0	1	1.51250V
0	1	1	1	0	0	0	1.50625V
0	1	1	1	0	1	1	1.50000V
0	1	1	1	0	1	0	1.49375V
0	1	1	1	1	0	1	1.48750V
0	1	1	1	1	0	0	1.48125V
0	1	1	1	1	1	1	1.47500V
0	1	1	1	1	1	0	1.46875V
1	0	0	0	0	0	1	1.46250V
1	0	0	0	0	0	0	1.45625V
1	0	0	0	0	1	1	1.45000V
1	0	0	0	0	1	0	1.44375V
1	0	0	0	1	0	1	1.43750V
1	0	0	0	1	0	0	1.43125V
1	0	0	0	1	1	1	1.42500V
1	0	0	0	1	1	0	1.41875V
1	0	0	1	0	0	1	1.41250V
1	0	0	1	0	0	0	1.40625V
1	0	0	1	0	1	1	1.40000V
1	0	0	1	0	1	0	1.39375V
1	0	0	1	1	0	1	1.38750V
1	0	0	1	1	0	0	1.38125V
1	0	0	1	1	1	1	1.37500V
1	0	0	1	1	1	0	1.36875V
1	0	1	0	0	0	1	1.36250V

To be continued

All brandname or trademark belong to their owner respectively

Table 1. Output Voltage Program (VRD10.x + VID6)

Pin Name							Nominal Output Voltage DACOUT
VID4	VID3	VID2	VID1	VID0	VID5	VID6	
1	0	1	0	0	0	0	1.35625V
1	0	1	0	0	1	1	1.35000V
1	0	1	0	0	1	0	1.34375V
1	0	1	0	1	0	1	1.33750V
1	0	1	0	1	0	0	1.33125V
1	0	1	0	1	1	1	1.32500V
1	0	1	0	1	1	0	1.31875V
1	0	1	1	0	0	1	1.31250V
1	0	1	1	0	0	0	1.30625V
1	0	1	1	0	1	1	1.30000V
1	0	1	1	0	1	0	1.29375V
1	0	1	1	1	0	1	1.28750V
1	0	1	1	1	0	0	1.28125V
1	0	1	1	1	1	1	1.27500V
1	0	1	1	1	1	0	1.26875V
1	1	0	0	0	0	1	1.26250V
1	1	0	0	0	0	0	1.25625V
1	1	0	0	0	1	1	1.25000V
1	1	0	0	0	1	0	1.24375V
1	1	0	0	1	0	1	1.23750V
1	1	0	0	1	0	0	1.23125V
1	1	0	0	1	1	1	1.22500V
1	1	0	0	1	1	0	1.21875V
1	1	0	1	0	0	1	1.21250V
1	1	0	1	0	0	0	1.20625V
1	1	0	1	0	1	1	1.20000V
1	1	0	1	0	1	0	1.19375V
1	1	0	1	1	0	1	1.18750V
1	1	0	1	1	0	0	1.18125V
1	1	0	1	1	1	1	1.17500V
1	1	0	1	1	1	0	1.16875V
1	1	1	0	0	0	1	1.16250V
1	1	1	0	0	0	0	1,15625V
1	1	1	0	0	1	1	1.15000V
1	1	1	0	0	1	0	1.14375V
1	1	1	0	1	0	1	1.13750V
1	1	1	0	1	0	0	1.13125V
1	1	1	0	1	1	1	1.12500V
1	1	1	0	1	1	0	1.11875V

To be continued

All brandname or trademark belong to their owner respectively

Table 1. Output Voltage Program (VRD10.x + VID6)

Pin Name							Nominal Output Voltage DACOUT
VID4	VID3	VID2	VID1	VID0	VID5	VID6	
1	1	1	1	0	0	1	1.11250V
1	1	1	1	0	0	0	1.10625V
1	1	1	1	0	1	1	1.10000V
1	1	1	1	0	1	0	1.09375V
1	1	1	1	1	0	1	OFF
1	1	1	1	1	0	0	OFF
1	1	1	1	1	1	1	OFF
1	1	1	1	1	1	0	OFF
0	0	0	0	0	0	1	1.08750V
0	0	0	0	0	0	0	1.08125V
0	0	0	0	0	1	1	1.07500V
0	0	0	0	0	1	0	1.06875V
0	0	0	0	1	0	1	1.06250V
0	0	0	0	1	0	0	1.05625V
0	0	0	0	1	1	1	1.05000V
0	0	0	0	1	1	0	1.04375V
0	0	0	1	0	0	1	1.03750V
0	0	0	1	0	0	0	1.03125V
0	0	0	1	0	1	1	1.02500V
0	0	0	1	0	1	0	1.01875V
0	0	0	1	1	0	1	1.01250V
0	0	0	1	1	0	0	1.00625V
0	0	0	1	1	1	1	1.00000V
0	0	0	1	1	1	0	0.99375V
0	0	1	0	0	0	1	0.98750V
0	0	1	0	0	0	0	0.98125V
0	0	1	0	0	1	1	0.97500V
0	0	1	0	0	1	0	0.96875V
0	0	1	0	1	0	1	0.96250V
0	0	1	0	1	0	0	0.95625V
0	0	1	0	1	1	1	0.95000V
0	0	1	0	1	1	0	0.94375V
0	0	1	1	0	0	1	0.93750V
0	0	1	1	0	0	0	0.93125V
0	0	1	1	0	1	1	0.92500V
0	0	1	1	0	1	0	0.91875V
0	0	1	1	1	0	1	0.91250V
0	0	1	1	1	0	0	0.90625V
0	0	1	1	1	1	1	0.90000V

To be continued

All brandname or trademark belong to their owner respectively

Table 1. Output Voltage Program (VRD10.x + VID6)

Pin Name							Nominal Output Voltage DACOUT
VID4	VID3	VID2	VID1	VID0	VID5	VID6	
0	0	1	1	1	1	0	0.89375V
0	1	0	0	0	0	1	0.88750V
0	1	0	0	0	0	0	0.88125V
0	1	0	0	0	1	1	0.87500V
0	1	0	0	0	1	0	0.86875V
0	1	0	0	1	0	1	0.86250V
0	1	0	0	1	0	0	0.85625V
0	1	0	0	1	1	1	0.85000V
0	1	0	0	1	1	0	0.84375V
0	1	0	1	0	0	1	0.83750V
0	1	0	1	0	0	0	0.83125V

All brandname or trademark belong to their owner respectively

Table 2. Output Voltage Program (VRD11)

Pin Name HEX	Nominal Output Voltage DACOUT
00	OFF
01	OFF
02	1.60000V
03	1.59375V
04	1.58750V
05	1.58125V
06	1.57500V
07	1.56875V
08	1.56250V
09	1.55625V
0A	1.55000V
0B	1.54375V
0C	1.53750V
0D	1.53125V
0E	1.52500V
0F	1.51875V
10	1.51250V
11	1.50625V
12	1.50000V
13	1.49375V
14	1.48750V
15	1.48125V
16	1.47500V
17	1.46875V
18	1.46250V
19	1.45625V
1A	1.45000V
1B	1.44375V
1C	1.43750V
1D	1.43125V
1E	1.42500V
1F	1.41875V
20	1.41250V
21	1.40625V
22	1.40000V
23	1.39375V
24	1.38750V
25	1.38125V
26	1.37500V

Pin Name HEX	Nominal Output Voltage DACOUT
27	1.36875V
28	1.36250V
29	1.35625V
2A	1.35000V
2B	1.34375V
2C	1.33750V
2D	1.33125V
2E	1.32500V
2F	1.31875V
30	1.31250V
31	1.30625V
32	1.30000V
33	1.29375V
34	1.28750V
35	1.28125V
36	1.27500V
37	1.26875V
38	1.26250V
39	1.25625V
3A	1.25000V
3B	1.24375V
3C	1.23750V
3D	1.23125V
3E	1.22500V
3F	1.21875V
40	1.21250V
41	1.20625V
42	1.20000V
43	1.19375V
44	1.18750V
45	1.18125V
46	1.17500V
47	1.16875V
48	1.16250V
49	1.15625V
4A	1.15000V
4B	1.14375V
4C	1.13750V
4D	1.13125V

To be continued

All brandname or trademark belong to their owner respectively

Table 2. Output Voltage Program (VRD11)

Pin Name HEX	Nominal Output Voltage DACOUT	Pin Name HEX	Nominal Output Voltage DACOUT
4E	1.12500V	75	0.88125V
4F	1.11875V	76	0.87500V
50	1.11250V	77	0.86875V
51	1.10625V	78	0.86250V
52	1.10000V	79	0.85625V
53	1.09375V	7A	0.85000V
54	1.08750V	7B	0.84375V
55	1.08125V	7C	0.83750V
56	1.07500V	7D	0.83125V
57	1.06875V	7E	0.82500V
58	1.06250V	7F	0.81875V
59	1.05625V	80	0.81250V
5A	1.05000V	81	0.80625V
5B	1.04375V	82	0.80000V
5C	1.03750V	83	0.79375V
5D	1.03125V	84	0.78750V
5E	1.02500V	85	0.78125V
5F	1.01875V	86	0.77500V
60	1.01250V	87	0.76875V
61	1.00625V	88	0.76250V
62	1.00000V	89	0.75625V
63	0.99375V	8A	0.75000V
64	0.98750V	8B	0.74375V
65	0.98125V	8C	0.73750V
66	0.97500V	8D	0.73125V
67	0.96875V	8E	0.72500V
68	0.96250V	8F	0.71875V
69	0.95625V	90	0.71250V
6A	0.95000V	91	0.70625V
6B	0.94375V	92	0.70000V
6C	0.93750V	93	0.69375V
6D	0.93125V	94	0.68750V
6E	0.92500V	95	0.68125V
6F	0.91875V	96	0.67500V
70	0.91250V	97	0.66875V
71	0.90625V	98	0.66250V
72	0.90000V	99	0.65625V
73	0.89375V	9A	0.65000V
74	0.88750V	9B	0.64375V

To be continued

All brandname or trademark belong to their owner respectively

Table 2. Output Voltage Program (VRD11)

Pin Name HEX	Nominal Output Voltage DACOUT	Pin Name HEX	Nominal Output Voltage DACOUT
9C	0.63750V	C3	X
9D	0.63125V	C4	X
9E	0.62500V	C5	X
9F	0.61875V	C6	X
A0	0.61250V	C7	X
A1	0.60625V	C8	X
A2	0.60000V	C9	X
A3	0.59375V	CA	X
A4	0.58750V	CB	X
A5	0.58125V	CC	X
A6	0.57500V	CD	X
A7	0.56875V	CE	X
A8	0.56250V	CF	X
A9	0.55625V	D0	X
AA	0.55000V	D1	X
AB	0.54375V	D2	X
AC	0.53750V	D3	X
AD	0.53125V	D4	X
AE	0.52500V	D5	X
AF	0.51875V	D6	X
B0	0.51250V	D7	X
B1	0.50625V	D8	X
B2	0.50000V	D9	X
B3	X	DA	X
B4	X	DB	X
B5	X	DC	X
B6	X	DD	X
B7	X	DE	X
B8	X	DF	X
B9	X	E0	X
BA	X	E1	X
BB	X	E2	X
BC	X	E3	X
BD	X	E4	X
BE	X	E5	X
BF	X	E6	X
C0	X	E7	X
C1	X	E8	X
C2	X	E9	X

To be continued

All brandname or trademark belong to their owner respectively

Table 2. Output Voltage Program (VRD11)

Pin Name HEX	Nominal Output Voltage DACOUT
EA	X
EB	X
EC	X
ED	X
EE	X
EF	X
F0	X
F1	X
F2	X
F3	X
F4	X
F5	X
F6	X
F7	X
F8	X
F9	X
FA	X
FB	X
FC	X
FD	X
FE	OFF
FF	OFF

Note: (1) 0 : Connected to GND
(2) 1 : Open
(3) X : Don't Care

All brandname or trademark belong to their owner respectively

Table 3. Output Voltage Program (K8)

VID4	VID3	VID2	VID1	VID0	Nominal Output Voltage DACOUT
0	0	0	0	0	1.550
0	0	0	0	1	1.525
0	0	0	1	0	1.500
0	0	0	1	1	1.475
0	0	1	0	0	1.450
0	0	1	0	1	1.425
0	0	1	1	0	1.400
0	0	1	1	1	1.375
0	1	0	0	0	1.350
0	1	0	0	1	1.325
0	1	0	1	0	1.200
0	1	0	1	1	1.275
0	1	1	0	0	1.250
0	1	1	0	1	1.225
0	1	1	1	0	1.200
0	1	1	1	1	1.175
1	0	0	0	0	1.150
1	0	0	0	1	1.125
1	0	0	1	0	1.100
1	0	0	1	1	1.075
1	0	1	0	0	1.050
1	0	1	0	1	1.025
1	0	1	1	0	1.000
1	0	1	1	1	0.975
1	1	0	0	0	0.950
1	1	0	0	1	0.925
1	1	0	1	0	0.900
1	1	0	1	1	0.875
1	1	1	0	0	0.850
1	1	1	0	1	0.825
1	1	1	1	0	0.800
1	1	1	1	1	Shutdown

Note: (1) 0 : Connected to GND
(2) 1 : Open

All brandname or trademark belong to their owner respectively

Table 4. Output Voltage Program (K8_M2)

Pin Name						Nominal Output Voltage DACOUT
VID5	VID4	VID3	VID2	VID1	VID0	
0	0	0	0	0	0	1.5500
0	0	0	0	0	1	1.5250
0	0	0	0	1	0	1.5000
0	0	0	0	1	1	1.4750
0	0	0	1	0	0	1.4500
0	0	0	1	0	1	1.4250
0	0	0	1	1	0	1.4000
0	0	0	1	1	1	1.3750
0	0	1	0	0	0	1.3500
0	0	1	0	0	1	1.3250
0	0	1	0	1	0	1.3000
0	0	1	0	1	1	1.2750
0	0	1	1	0	0	1.2500
0	0	1	1	0	1	1.2250
0	0	1	1	1	0	1.2000
0	0	1	1	1	1	1.1750
0	1	0	0	0	0	1.1500
0	1	0	0	0	1	1.1250
0	1	0	0	1	0	1.1000
0	1	0	0	1	1	1.0750
0	1	0	1	0	0	1.0500
0	1	0	1	0	1	1.0250
0	1	0	1	1	0	1.0000
0	1	0	1	1	1	0.9750
0	1	1	0	0	0	0.9500
0	1	1	0	0	1	0.9250
0	1	1	0	1	0	0.9000
0	1	1	0	1	1	0.8750
0	1	1	1	0	0	0.8500
0	1	1	1	0	1	0.8250
0	1	1	1	1	0	0.8000
0	1	1	1	1	1	0.7750
1	0	0	0	0	0	0.7625
1	0	0	0	0	1	0.7500

To be continued

All brandname or trademark belong to their owner respectively

Table 4. Output Voltage Program (K8_M2)

Pin Name						Nominal Output Voltage DACOUT
VID5	VID4	VID3	VID2	VID1	VID0	
1	0	0	0	1	0	0.7375
1	0	0	0	1	1	0.7250
1	0	0	1	0	0	0.7125
1	0	0	1	0	1	0.7000
1	0	0	1	1	0	0.6875
1	0	0	1	1	1	0.6750
1	0	1	0	0	0	0.6625
1	0	1	0	0	1	0.6500
1	0	1	0	1	0	0.6375
1	0	1	0	1	1	0.6250
1	0	1	1	0	0	0.6125
1	0	1	1	0	1	0.6000
1	0	1	1	1	0	0.5875
1	0	1	1	1	1	0.5750
1	1	0	0	0	0	0.5625
1	1	0	0	0	1	0.5500
1	1	0	0	1	0	0.5375
1	1	0	0	1	1	0.5250
1	1	0	1	0	0	0.5125
1	1	0	1	0	1	0.5000
1	1	0	1	1	0	0.4875
1	1	0	1	1	1	0.4750
1	1	1	0	0	0	0.4625
1	1	1	0	0	1	0.4500
1	1	1	0	1	0	0.4375
1	1	1	0	1	1	0.4250
1	1	1	1	0	0	0.4125
1	1	1	1	0	1	0.4000
1	1	1	1	1	0	0.3875
1	1	1	1	1	1	0.3750

Note: (1) 0 : Connected to GND
(2) 1 : Open
(3) The voltage above are load independent for desktop and server platforms. For mobile platforms the voltage above correspond to zero load current.

All brandname or trademark belong to their owner respectively

Absolute Maximum Ratings (Note 1)

- Supply Voltage, V_{DD} ---------- 7V
- Input, Output or I/O Voltage ---------- (GND – 0.3V) to (V_{DD} + 0.3V)
- Power Dissipation, P_D @ T_A = 25°C
  VQFN–40L 6x6 ---------- 2.857W
- Package Thermal Resistance (Note 2)
  VQFN-40L 6x6, θ_{JA} ---------- 35°C/W
- Junction Temperature ---------- 150°C
- Lead Temperature (Soldering, 10 sec.) ---------- 260°C
- Storage Temperature Range ---------- –65°C to 150°C
- ESD Susceptibility (Note 3)
  HBM (Human Body Mode) ---------- 2kV
  MM (Machine Mode) ---------- 200V

Recommended Operating Conditions (Note 4)

- Supply Voltage, V_{DD} ---------- 5V ± 10%
- Junction Temperature Range ---------- –40°C to 125°C
- Ambient Temperature Range ---------- –40°C to 85°C

Electrical Characteristics

(V_{DD} = 5V, T_A = 25°C, unless otherwise specified)

Parameter		Symbol	Test Conditions	Min	Typ	Max	Unit
Supply Current							
V_{DD} Nominal Supply Current		I_{DD}	PWM 1, 2, 3, 4, 5 Open	--	12	16	mA
VID Change Current		I_{SS}	VR_RDY = High	0.5	1	1.5	mA
Power On Reset							
POR Threshold		V_{DDRTH}	V_{DD} Rising	4.0	4.2	4.5	V
Hysteresis		V_{DDHYS}		0.2	0.5	--	V
V_{DVD} Threshold	Trip (Low to High)	V_{DVDTH}	Enable	0.9	1.0	1.1	V
	Hysteresis	V_{DVDHYS}		--	60	--	mV
V_{TT} Threshold	Trip (Low to High)	V_{TTTH}	Enable	0.75	0.85	0.95	V
	Hysteresis	V_{TTHYS}		--	0.1	--	
Oscillator							
Free Running Frequency		f_{OSC}	R_{RT} = 20kΩ	180	200	220	kHz
Frequency Adjustable Range		f_{OSC_ADJ}		50	--	400	kHz
Ramp Amplitude		ΔV_{OSC}	R_{RT} = 20kΩ	--	1.9	--	V
Ramp Valley		V_{RV}		0.7	1.0	--	V

To be continued

All brandname or trademark belong to their owner respectively

Parameter	Symbol	Test Conditions	Min	Typ	Max	Unit
Maximum On-Time of Each Channel		Four Phase Operation	45	50	55	%
RT Pin Voltage	V_{RT}	R_{RT} = 20kΩ	0.9	1.0	1.1	V
Maximum On-Time			1	--	3	μs
Reference and DAC						
DACOUT Voltage Accuracy	ΔV_{DAC}	$V_{DAC} \geq 1V$	–0.5	--	0.5	%
		$1V \geq V_{DAC} \geq 0.8V$	–5	--	5	mV
		$V_{DAC} < 0.8V$	–8	--	8	mV
DAC (VID0-VID125) Input Low	V_{ILDAC}		--	--	$1/2V_{TT} - 0.2$	V
DAC (VID0-VID125) Input High	V_{IHDAC}		$1/2V_{TT} + 0.2$	--	--	V
V_{ID} Pull-up Resistance			12	15	18	kΩ
OFS Pin Voltage	V_{OFS}	R_{OFS} = 100kΩ	0.9	1.0	1.1	V
Error Amplifier						
DC Gain			--	65	--	dB
Gain-Bandwidth Product	GBW		--	10	--	MHz
Slew Rate	SR	COMP = 10pF	--	8	--	V/μs
Maximum Current	I_{EA_SLEW}		50	--	--	μA
Current Sense GM Amplifier						
CSN Full Scale Source Current	I_{ISPFSS}		100	--	--	μA
CSN Current for OCP			150	--	--	μA
Input Offset Voltage	V_{OSCS}		–5	0	5	mV
Protection						
Over Voltage Trip (FB-DACOUT)	ΔOVT		100	150	200	mV
Over Voltage Delay Time			--	20	--	μs
IMAX Voltage	V_{IMAX}	R_{IMAX} = 20kΩ	0.9	1.0	1.1	V
Power Good						
Output Low Voltage	V_{PGOODL}	I_{PGOOD} = 4mA	--	--	0.2	V
Thermal Management						
VR_HOT Threshold Level			25	28	30	%VCC5
VR_HOT Hysteresis			--	5	--	%VCC5

Note 1. Stresses listed as the above "Absolute Maximum Ratings" may cause permanent damage to the device. These are for stress ratings. Functional operation of the device at these or any other conditions beyond those indicated in the operational sections of the specifications is not implied. Exposure to absolute maximum rating conditions for extended periods may remain possibility to affect device reliability.

Note 2. θ_{JA} is measured in the natural convection at T_A = 25°C on the four layers high effective thermal conductivity test board of JEDEC 51-7 thermal measurement standard.

Note 3. Devices are ESD sensitive. Handling precaution recommended.

Note 4. The device is not guaranteed to function outside its operating conditions.

All brandname or trademark belong to their owner respectively

Typical Operating Characteristics

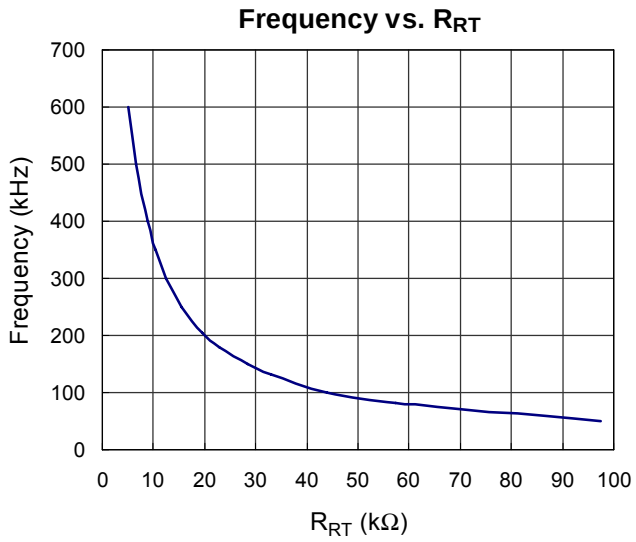

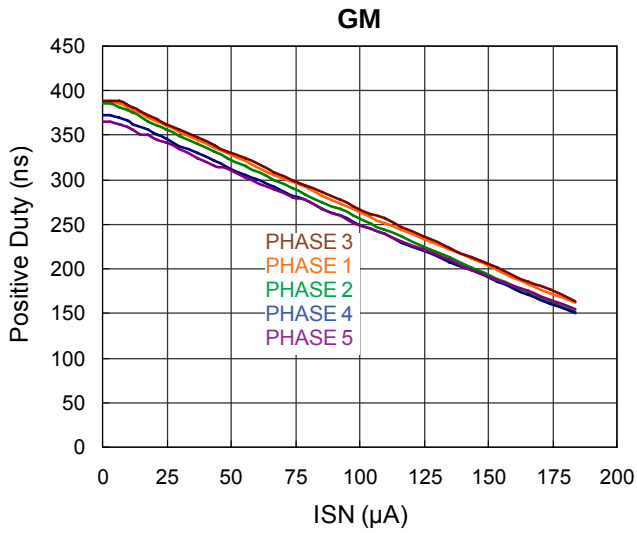

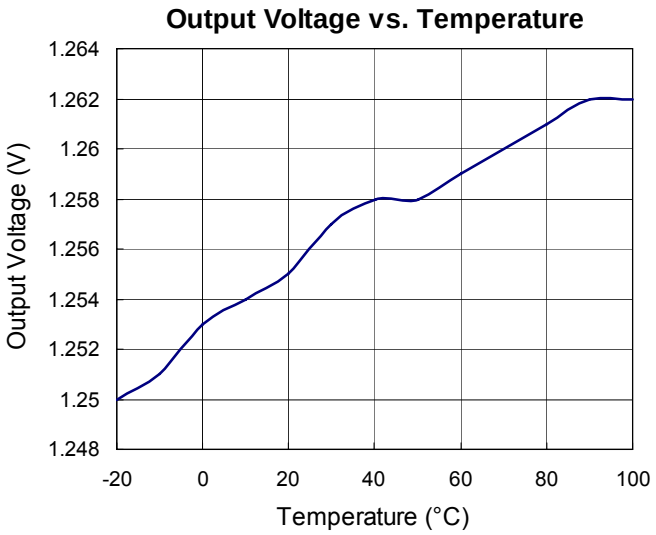

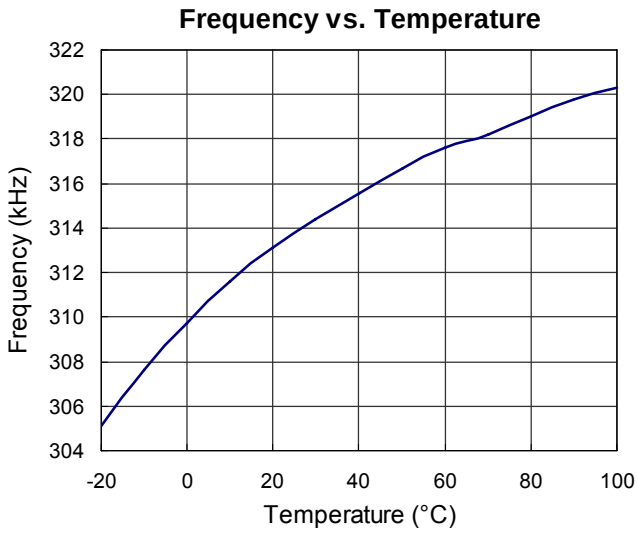

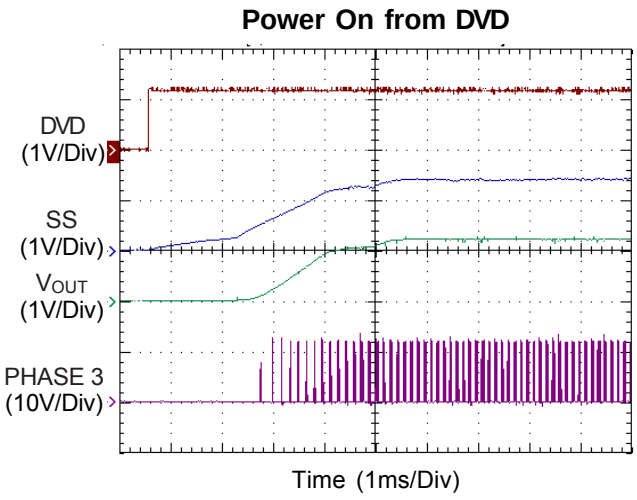

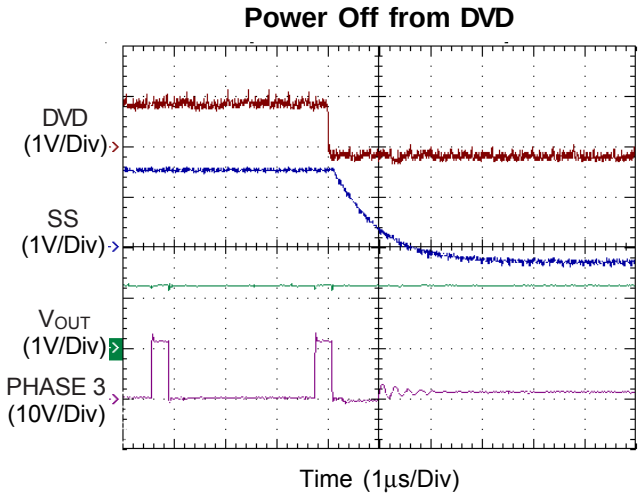

All brandname or trademark belong to their owner respectively

Power On from VCC12

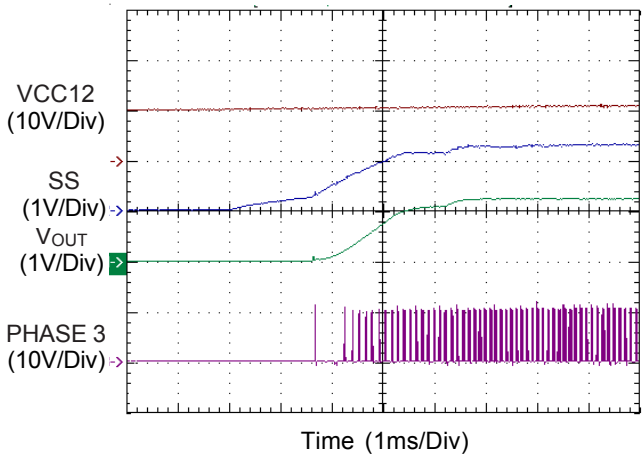

Power Off from VCC12

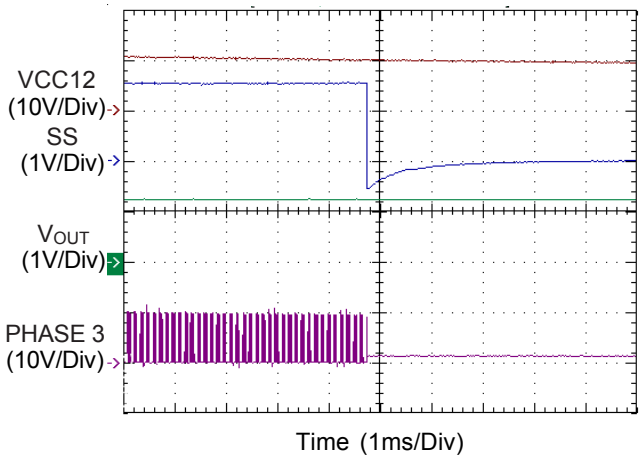

Power On from VCC5

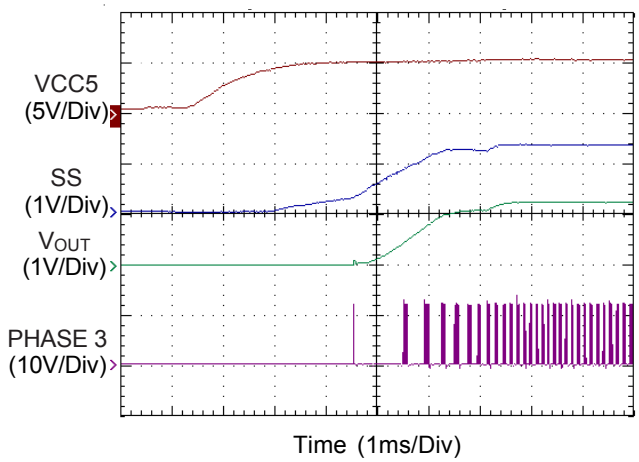

Power Off from VCC5

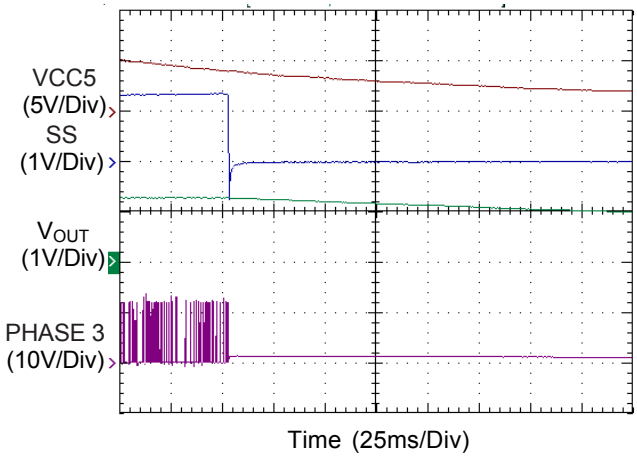

Power On with OCP

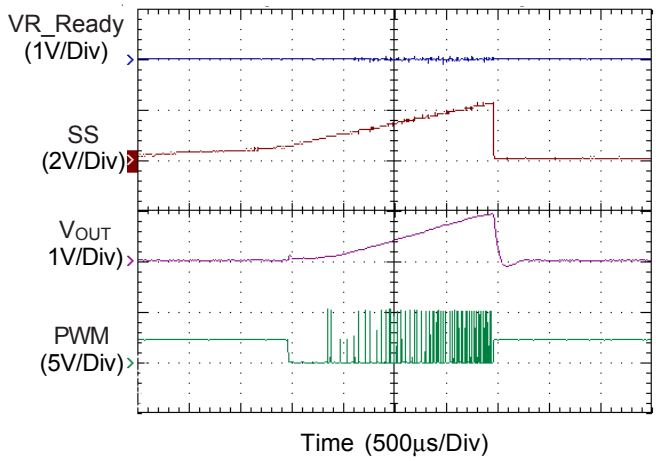

Output Short Circuit

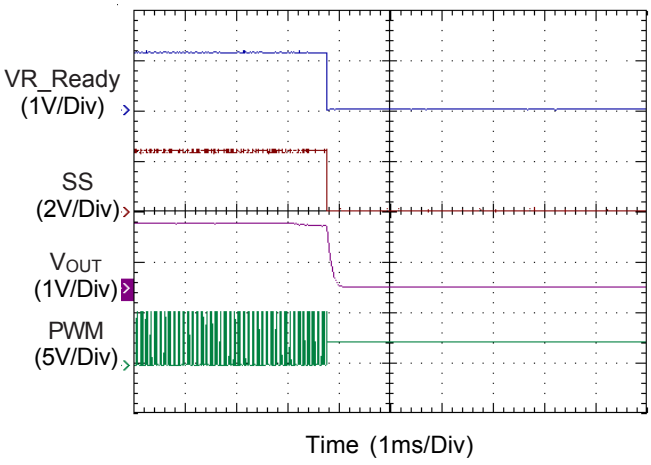

All brandname or trademark belong to their owner respectively

V_{OUT} Droop

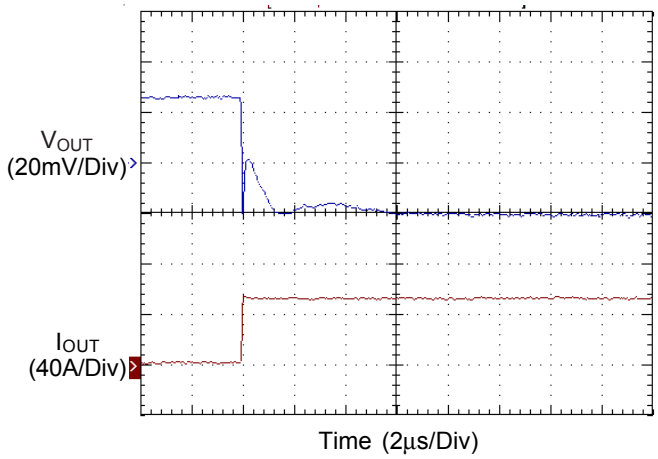

V_{OUT} Overshoot

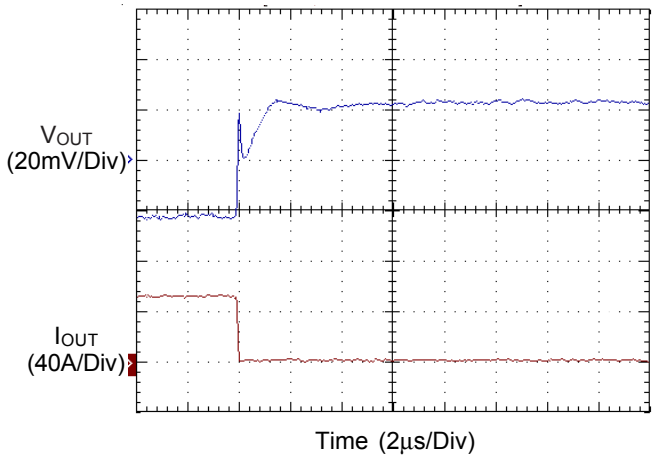

Dynamic VID

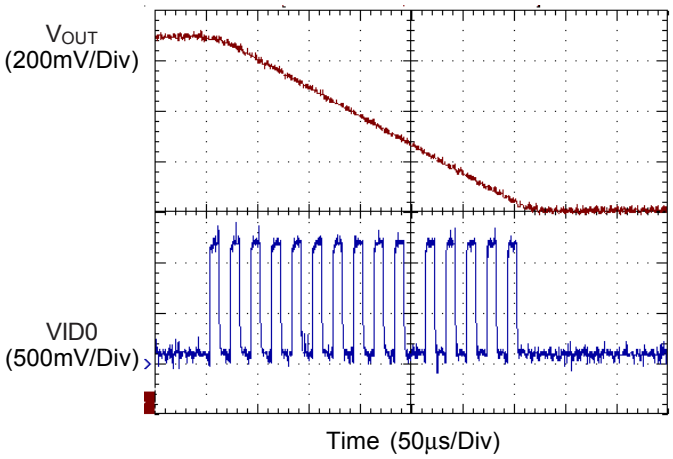

Dynamic VID

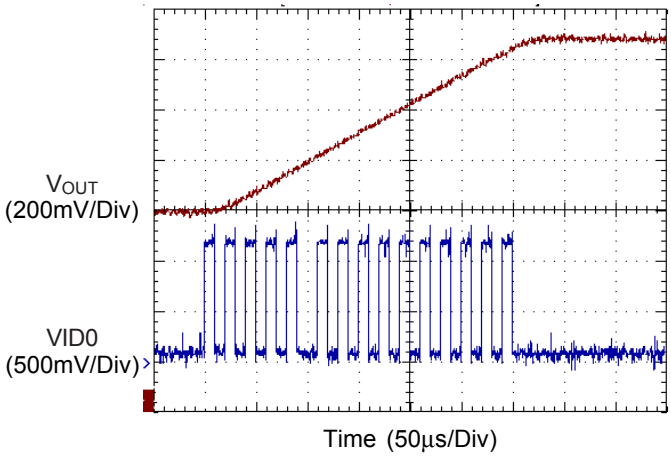

OVP

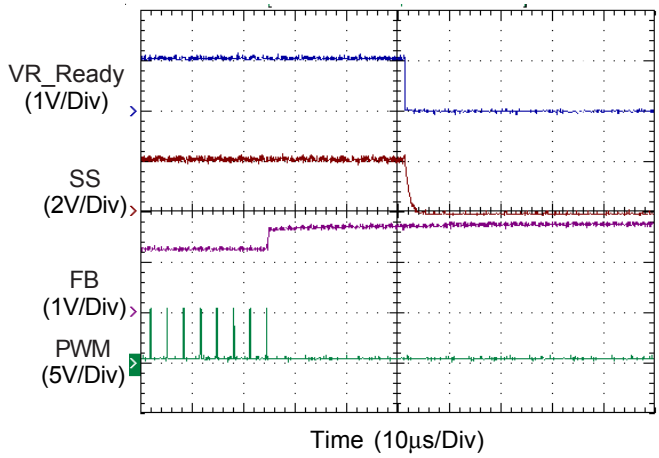

All brandname or trademark belong to their owner respectively

Applications Information

RT8802A is a multi-phase DC/DC controller specifically designed to deliver high quality power for next generation CPU. RT8802A controls a special power on sequence & monitors the thermal condition of VR module to meet the VRD11 requirement. Phase currents are sensed by innovative time-sharing DCR current sensing technique for channel current balance, droop tuning, and over current protection. Using one common GM amplifier for current sensing eliminates offset errors and linearity variation between GMs. As sub-milli-ohm-grade inductors are widely used in modern mother boards, slight mismatch of GM amplifiers offset and linearity results in considerable current shift between phases. The time-sharing DCR current sensing technique is extremely important to guarantee phase current balance in mass production.

Converter Initialization, Phase Selection, and Power Good Function

The RT8802A initiates only after 3 pins are ready: VDD pin power on reset (POR), VTT/EN pin enabled, and DVD pin is higher than 1V. VDD POR is to make sure RT8802A is powered by a voltage for normal work. The rising threshold voltage of VDD POR is 4.2V typically. At VDD POR, RT8802A checks PWM3, PWM4 and PWM5 status to determine phase number of operation. Pull high PWM3 for two-phase operation; pull high PWM4 for three phase operation; pull high PWM5 for four-phase operation. The unused current sense pins should be connected to GND or left floating.

VTT/EN acts as a chip enable pin and receives signal from FSB or other power management IC.

DVD is to make sure that ATX12V is ready for drivers to work normally. Connect a voltage divider from ATX12V to DVD pin as shown in the Typical Application Circuit. Make sure that DVD pin voltage is below its threshold voltage before drivers are ready and above its threshold voltage for minimum ATX12V during normal operation.

If any one of VDD, VTT/EN, and DVD is not ready, RT8802A keeps its PWM outputs high impedance and the companion drivers turn off both upper and lower MOSFETs. After VDD, VTT/EN, and DVD are ready, RT8802A initiates its soft start cycle that is compliant with Intel®VRD11 specification as shown in Figure 1. A time variant internal current source charges the capacitor connected to SS pin. SS voltage ramps up piecewise linearly and locks VID_DAC output with a specified voltage drop. Consequently, V_{CORE} is built up according to VID_DAC output and meet Intel® VRD11 requirement. VR_READY output is pulled high by external resistor when V_{CORE} reaches VID_DAC output with 1~2ms delay. An SS capacitor about 47nF is recommend for VRD11 compliance.

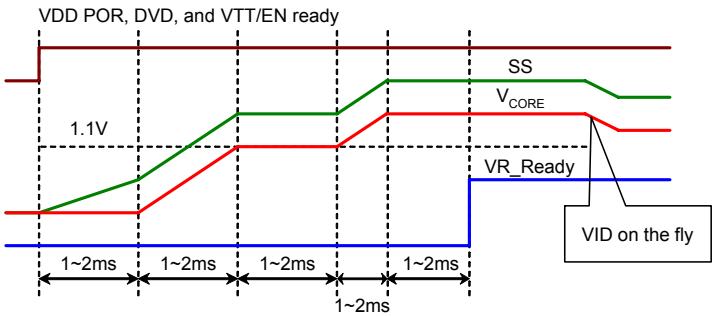

Figure 1. Timing Diagram During Soft Start Interval

Voltage Control

CPU V_{CORE} voltage is Kelvin sensed by FB and FBRTN pins and precisely regulated to VID_DAC output by internal high gain Error Amplifier (EA). The sensed signal is also used for power good and over voltage function. The typical OVP trip point is 170mV above VID_DAC output. RT8802A pulls PWM outputs low and latches up upon OVP trip to prevent damaging the CPU. It can only restart by resetting one of VDD, DVD, or VTT/EN pin.

RT8802A supports Intel VRD10.x, VRD11, AMD K8 and AMD K8_M2 VID specification.

The change of VID_DAC output at VID on the fly is also smoothed by capacitor connected to SS pin. Consequently, Vcore shifts to its new position smoothly as shown in Figure 2.

All brandname or trademark belong to their owner respectively

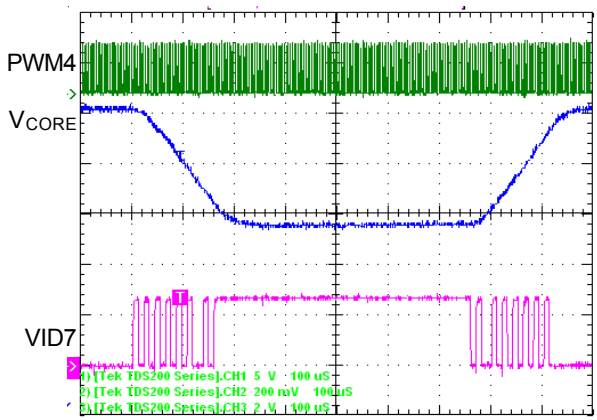

Figure 2. Vcore Response at VID on the Fly

DCR Current Sensing

RT8802A adopts an innovative time-sharing DCR current sensing technique to sense the phase currents for phase current balance (phase thermal balance) and load line regulation as shown in Figure 3. Current sensing amplifier GM samples and holds voltages VCx across the current sensing capacitor Cx by turns in a switching cycle. According to the Basic Circuit Theory, if

$$\frac{Lx}{DCRx} = Rx \times Cx \text{ then } VCx = I_{LX} \times DCRx$$

Consequently, the sensing current I_X is proportional to inductor current I_{LX} and is expressed as :

$$I_X = \frac{I_{LX} \times DCRx}{R_{CSNX}}$$

The sensed current I_X is used for current balance and droop tuning as described as followed. Since all phases share one common GM, GM offset and linearity variation effect is eliminated in practical applications. As sub-milli-ohm-grade inductors are widely used in modern mother boards, slight mismatch of GM amplifiers offset and linearity results in considerable current shift between phases. The time sharing DCR current sensing technical is extremely important to guarantee phase current balance in mass production.

Phase Current Balance

The sampled and held phase current I_X are summed and averaged to get the averaged current $\overline{I_X}$. Each phase current I_X then is compared with the averaged current. The difference between I_X and $\overline{I_X}$ is injected to corresponding PWM comparator. If phase current I_X is smaller than the averaged current , RT8802A increases the duty cycle of corresponding phase to increase the phase current accordingly and vice versa.

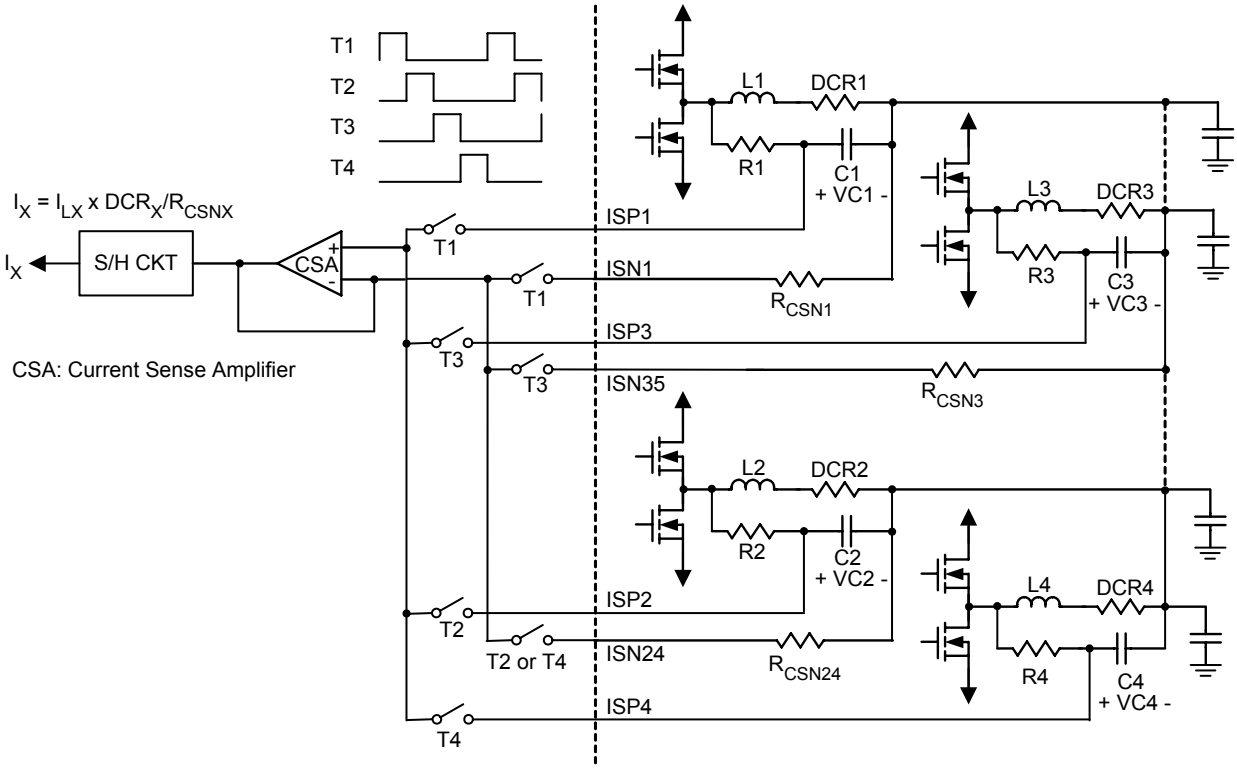

Figure 3

All brandname or trademark belong to their owner respectively

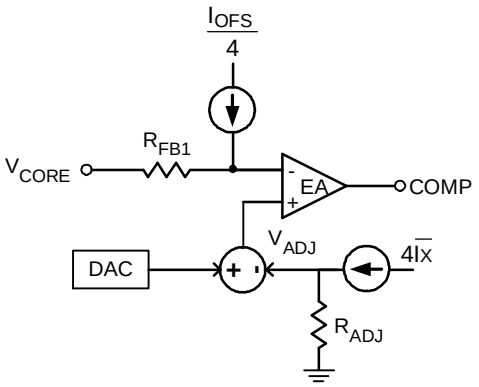

Figure 4. Load Line and Offset Function

Output Voltage Offset Function

To meet Intel®requirement of initial offset of load line, RT8802A provides programmable initial offset function. External resistor R_{OFS} and voltage source at OFS pin generate offset current $I_{OFS} = \frac{V_{OFS}}{R_{OFS}}$, where V_{OFS} is 1V typical. One quarter of I_{OFS} flows through R_{FB1} as shown in Figure 4. Error amplifier would hold the inverting pin equal to V_{DAC} - V_{ADJ}. Thus output voltage is subtracted from V_{DAC} - V_{ADJ} for a constant offset voltage.

$$V_{CORE} = V_{DAC} - V_{ADJ} - \frac{R_{FB1}}{4 \times R_{OFS}}$$

A positive output voltage offset is possible by connecting R_{OFS} to VDD instead of to GND. Please note that when R_{OFS} is connected to VDD, V_{OFS} is V_{DD} – 2V typically and half of I_{OFS} flows through R_{FB1}. V_{CORE} is rewritten as :

$$V_{CORE} = V_{DAC} - V_{ADJ} + \frac{R_{FB1}}{R_{OFS}}$$

Current Ratio Setting

Current ratio adjustment is possible as described below. It is important for achieving thermal balance in practical application where thermal conditions between phases are not identical. Figure 5 shows the application circuit of GM for current ratio requirement. According to Basic Circuit Theory

$$VCx = \frac{\frac{R_{PX}}{Rx + R_{PX}}}{\frac{SRx \times R_{PX} \times Cx}{Rx + R_{PX}} + 1} \times I_{LX} \times DCRx$$

If $\frac{L_X}{DCRx} = (R_X // R_{PX}) \times Cx$ then

$$VCx = \frac{R_{PX}}{Rx + R_{PX}} \times I_{LX} \times DCRx$$

With other phase kept unchanged, this phase would share (R_{PX} + Rx) / R_{PX} times current than other phases. Figure 6 and 7 show different current ratio setting for the power stage when Phase 4 is programmed 2 times current than other phases. Figure 8 and 9 compare the above current ratio setting results.

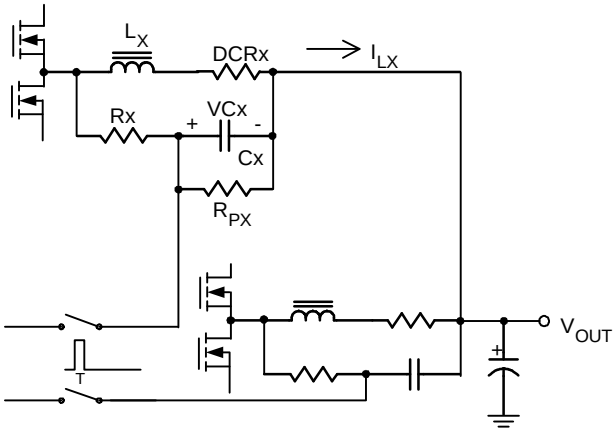

Figure 5

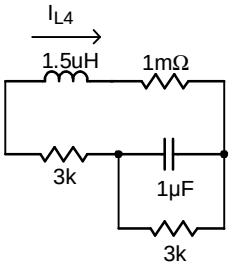

Figure 6. GM4 Setting for current ratio function

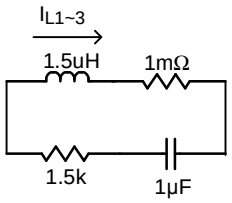

Figure 7. GM1~3 Setting for current ratio function

All brandname or trademark belong to their owner respectively

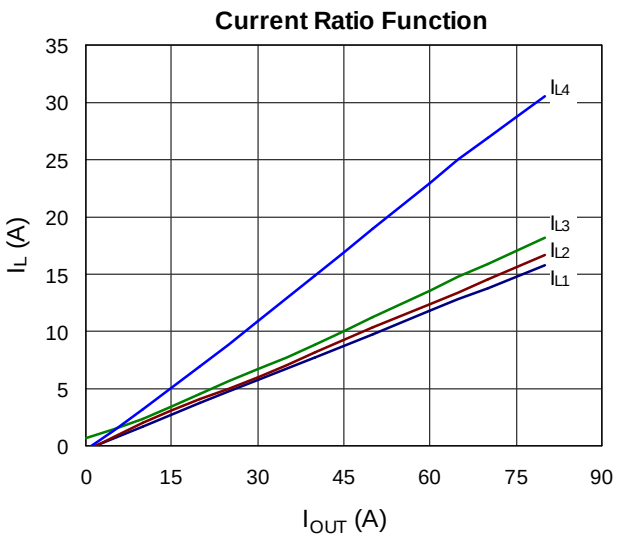

Figure 8

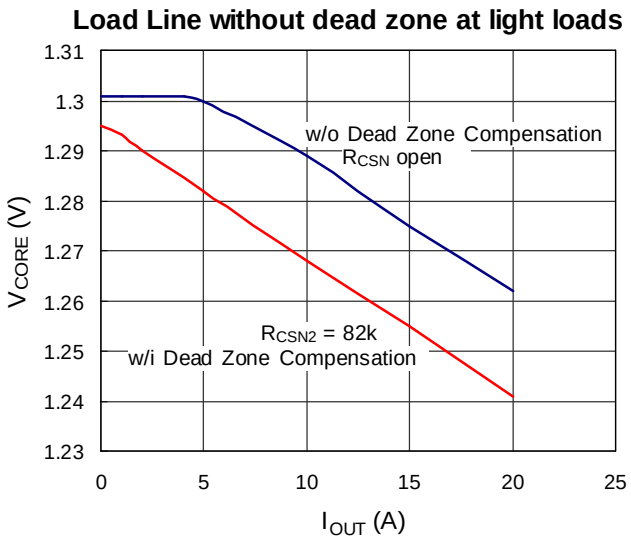

Figure 10

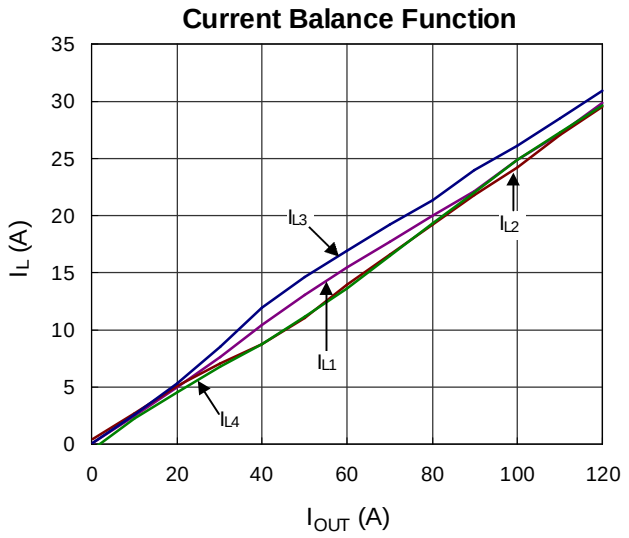

Figure 9

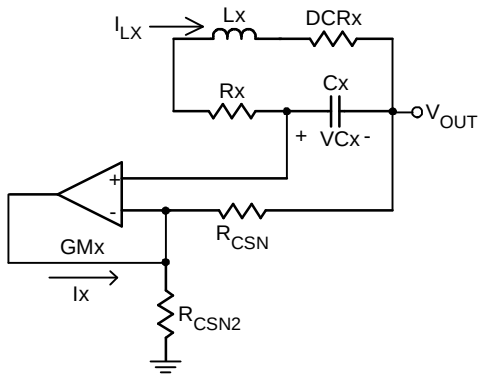

Figure 11. Application circuit of GM

Dead Zone Elimination

RT8802A samples and holds inductor current at 50% period by time-sharing sourcing a current I_X to R_{CSN}. At light load condition when inductor current is not balance, voltage VCx across the sensing capacitor would be negative. It needs a negative I_X to sense the voltage. However, RT8802A CANNOT provide a negative I_X and consequently cannot sense negative inductor current. This results in dead zone of load line performance as shown in Figure 10. Therefore a technique as shown in Figure 11 is required to eliminate the dead zone of load line at light load condition.

Referring to Figure 11, I_X is expressed as :

$$I_X = \frac{V_{OUT}}{R_{CSN2}} + \frac{I_{LX_50\%} \times DCRx}{R_{CSN2}} + \frac{I_{LX_50\%} \times DCRx}{R_{CSN}} \quad (1)$$

where $I_{LX_50\%}$ is the of inductor current at 50% period. To make sure RT8802A could sense the inductor current, right hand side of Equation (1) should always be positive:

$$\frac{V_{OUT}}{R_{CSN2}} + \frac{I_{LX_50\%} \times DCRx}{R_{CSN2}} + \frac{I_{LX_50\%} \times DCRx}{R_{CSN}} \geq 0 \quad (2)$$

Since R_{CSN} >> DCRx in practical application, Equation (2) could be simplified as :

$$\frac{V_{OUT}}{R_{CSN2}} \geq \left| \frac{I_{LX_50\%} \times DCRx}{R_{CSN}} \right|$$

All brandname or trademark belong to their owner respectively

For example, assuming the negative inductor current is $I_{LX_50\%}$ = –5A at no load, then for

R_{CSN} 330Ω, R_{ADJ} = 160Ω, V_{OUT} = 1.300V

$$\frac{1.3V}{R_{CSN2}} \geq \left|\frac{-5A \times 1m\Omega}{330\Omega}\right|$$

$R_{CSN2} \leq 85.8k\Omega$

Choose R_{CSN2} = 82kΩ

Figure 10 shows that dead zone of load line at light load is eliminated by applying this technique.

VR_HOT & VR_FAN Setting

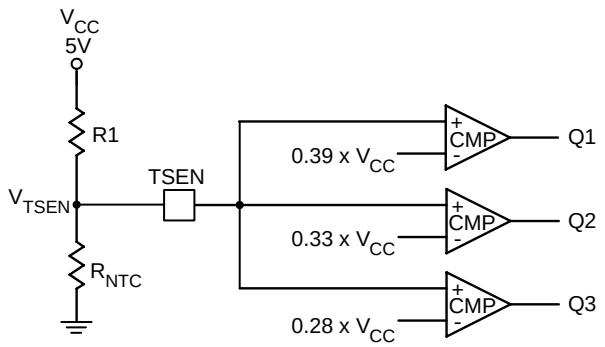

Figure 12

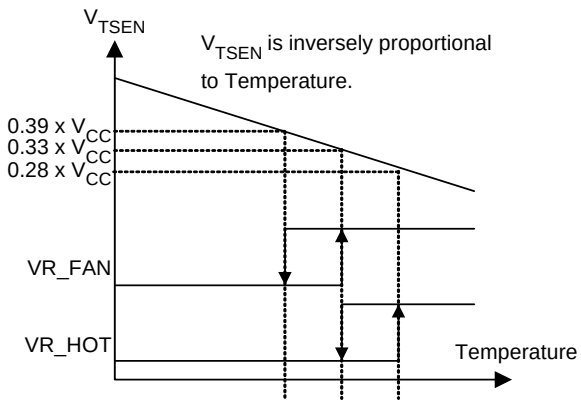

Figure 13. VR_HOT and VR_FAN Signal vs TSEN Voltage

Load Line Setting and Thermal Compensation

V_{ADJ} = Sum(I_X) x R_{ADJ} = (DCR x R_{ADJ} / R_{CSN}) x I_{OUT}

= LL x I_{OUT}

V_{OUT} = V_{DAC} – V_{ADJ} = V_{DAC} – LL x I_{OUT}

LL = DCR(PTC) x R_{ADJ}(NTC) / R_{CSN}

DCR is the inductor DCR which is a PTC resistance.

If R_{ADJ} is connected as in Figure 14, R_{ADJ} = R1 + (R2// R_{NTC}), which is a negative temperature correlated resistance. By properly selecting R1 and R2, the positive temperature coefficient of DCR can be canceled by the negative temperature coefficient of R_{ADJ}. Thus the load line will be thermally compensated.

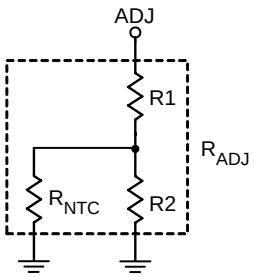

Figure 14. R_{ADJ} Connection for Thermal Compensation

Over Current Protection

Thermally compensated total current OCP

V_{TCOC} is compared with V_{ADJ}. If V_{ADJ} > V_{TCOC} then OCP is triggered.

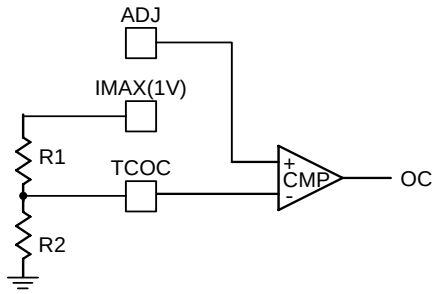

Figure 15

Phase Current OCP

RT8802A uses an external resistor R_{IMAX} connected to IMAX pin to generate a reference current I_{IMAX} for over current protection :

$$I_{IMAX} = \frac{V_{IMAX}}{R_{IMAX}}$$

where V_{IMAX} is typical 1.0V. OCP comparator compares each sensed phase current I_X with this reference current as shown in Figure 16. Equivalently, the maximum phase current $I_{LX(MAX)}$ is calculated as below :

$$\frac{1}{3} I_{X(MAX)} = \frac{1}{2} I_{IMAX}$$

$$I_{X(MAX)} = \frac{3}{2} I_{IMAX} = \frac{3}{2} \times \frac{V_{IMAX}}{R_{IMAX}}$$

$$I_{LX(MAX)} = I_X \times \frac{R_{CSNX}}{DCR_X} = \frac{3}{2} \times \frac{V_{IMAX}}{R_{IMAX}} \times \frac{R_{CSNX}}{R_{LX}}$$

All brandname or trademark belong to their owner respectively

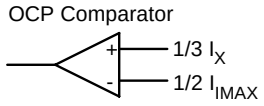

Figure 16. Over Current Comparator

Phase current OCP and total current OCP with thermal compensation

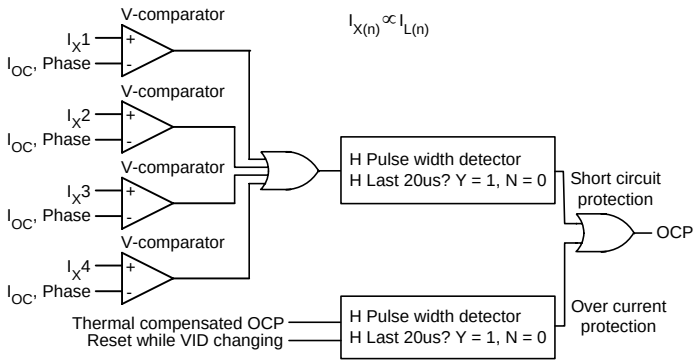

Figure 17

Error Amplifier Characteristic

For fast response of converter to meet stringent output current transient response, RT8802A provides large slew rate capability and high gain-bandwidth performance.

EA Falling Slew Rate

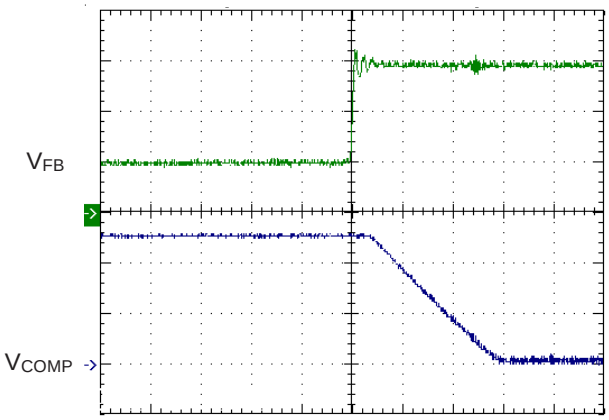

Time (250ns/Div)

Figure 18. EA Rising Transient with 10pF Loading ; Slew Rate = 10V/μs

EA Rising Slew Rate

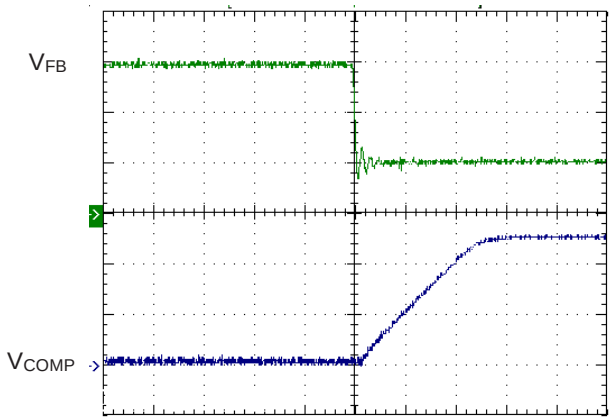

Time (250ns/Div)

Figure 19. EA Falling Transient with 10pF Loading ; Slew Rate = 8V/μs

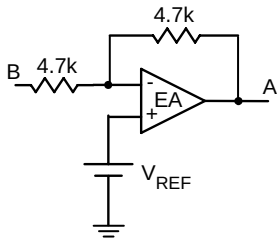

Figure 20. Gain-Bandwidth Measurement by signal A divided by signal B

Design Procedure Suggestion

a. Output filter pole and zero (Inductor, output capacitor value & ESR).

b. Error amplifier compensation & saw-tooth wave amplitude (compensation network).

c. Kelvin sense for V_{CORE}.

Current Loop Setting

a. GM amplifier S/H current (current sense component DCR, ISP_X and ISN_X pin external resistor value).

b. Over current protection trip point (R_{IMAX} resistor).

VRM Load Line Setting

a. Droop amplitude (ADJ pin resistor).

b. No load offset (R_{CSN})

c. DAC offset voltage setting (OFS pin & compensation network resistor).

All brandname or trademark belong to their owner respectively

d. Temperature coefficient compensation(TSEN external resister & thermistor, resistor between ADJ and GND.)

Power Sequence & SS

DVD pin external resistor and SS pin capacitor.

PCB Layout

a. Kelvin sense for current sense GM amplifier input.

b. Refer to layout guide for other items.

All brandname or trademark belong to their owner respectively

Outline Dimension

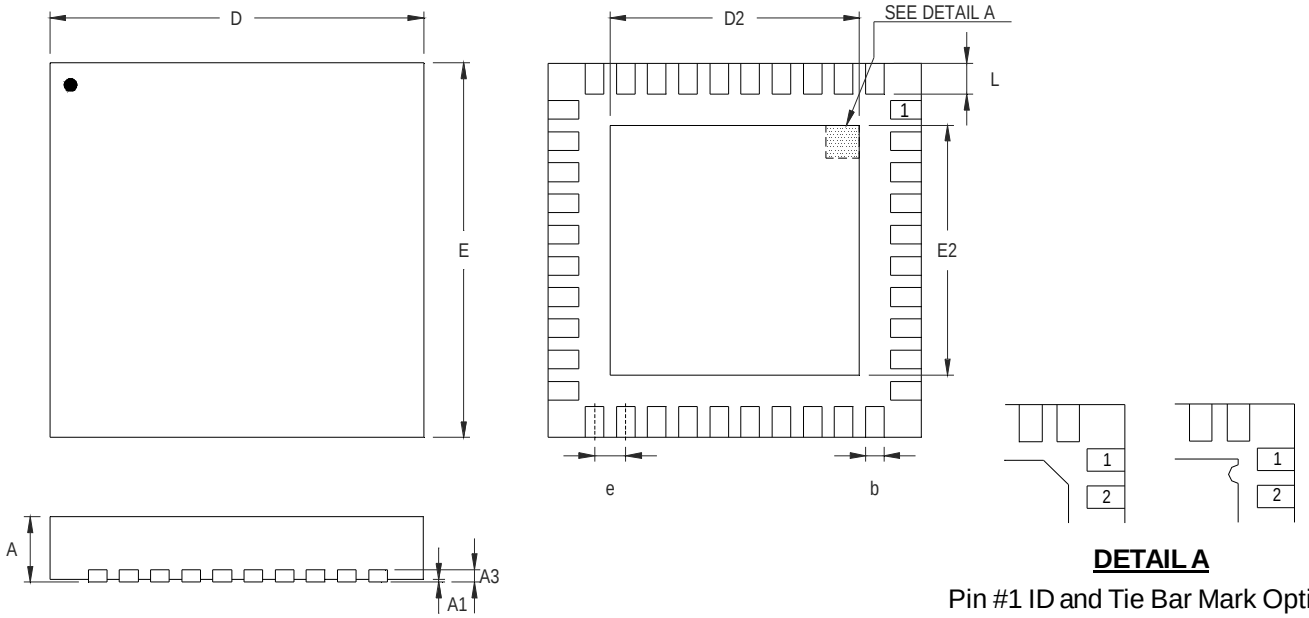

DETAIL A

Pin #1 ID and Tie Bar Mark Options

Note : The configuration of the Pin #1 identifier is optional, but must be located within the zone indicated.

Symbol	Dimensions In Millimeters		Dimensions In Inches	
	Min	Max	Min	Max
A	0.800	1.000	0.031	0.039
A1	0.000	0.050	0.000	0.002
A3	0.175	0.250	0.007	0.010
b	0.180	0.300	0.007	0.012
D	5.950	6.050	0.234	0.238
D2	4.000	4.750	0.157	0.187
E	5.950	6.050	0.234	0.238
E2	4.000	4.750	0.157	0.187
e	0.500		0.020	
L	0.350	0.450	0.014	0.018

V-Type 40L QFN 6x6 Package

Richtek Technology Corporation

Headquarter
5F, No. 20, Taiyuen Street, Chupei City
Hsinchu, Taiwan, R.O.C.
Tel: (8863)5526789 Fax: (8863)5526611

Richtek Technology Corporation

Taipei Office (Marketing)
5F, No. 95, Minchiuan Road, Hsintien City
Taipei County, Taiwan, R.O.C.
Tel: (8862)86672399 Fax: (8862)86672377
Email: marketing@richtek.com

Information that is provided by Richtek Technology Corporation is believed to be accurate and reliable. Richtek reserves the right to make any change in circuit design, specification or other related things if necessary without notice at any time. No third party intellectual property infringement of the applications should be guaranteed by users when integrating Richtek products into any application. No legal responsibility for any said applications is assumed by Richtek.