SmartJitter™ Multi-Mode Flyback Controller

General Description

The RT7739NC is an enhanced high-efficiency multi-mode PWM flyback controller, incorporating Richtek's proprietary SmartJitter™ technology. The innovative SmartJitter™ technology can reduce EMI emissions of a switch-mode power supply in green mode as well as eliminate output ripple due to frequency jittering. Also, the RT7739NC features a multi-mode control scheme, operating from continuous-conduction mode (CCM) to discontinuous-conduction mode (DCM) with valley switching, to achieve high efficiency and optimal performance.

The RT7739NC is a current-mode PWM controller for flyback converters. It integrates comprehensive and programmable protection features, which include propagation delay compensation, output over-voltage protection (OVP), external over-temperature protection (OTP), and bulk-capacitor brown-in/brown-out protection. With the above features, the RT7739NC enables a cost-effective and compact design for a wide range of AC-DC conversion applications. It is available in a SOT-23-6 package.

Features

- **Proprietary SmartJitter™ Technology**
  - **Reducing EMI Emissions of SMPS**
  - **Eliminating Frequency-Jittering-Induced Output Ripple**
- **Operating in Continuous-Conduction Mode (CCM), Discontinuous-Conduction Mode (DCM), DCM with Valley-Switching**
- **Ultra-low Start-Up Current (<3μA)**
- **Accurate Over-Current Protection (OCP)**
- **Programmable Line Compensation**
- **Programmable Output Over-Voltage Protection**
- **Programmable External Over-Temperature Protection**
- **Programmable Bulk-Capacitor Brown-In/Brown-Out Protection**
- **Driver Capability : 200mA/–300mA**
- **High Noise Immunity**

Applications

- Switching AC-DC Adapter
- NB Adapter
- TV/Monitor Standby Power
- PC Peripherals

Simplified Application Circuit

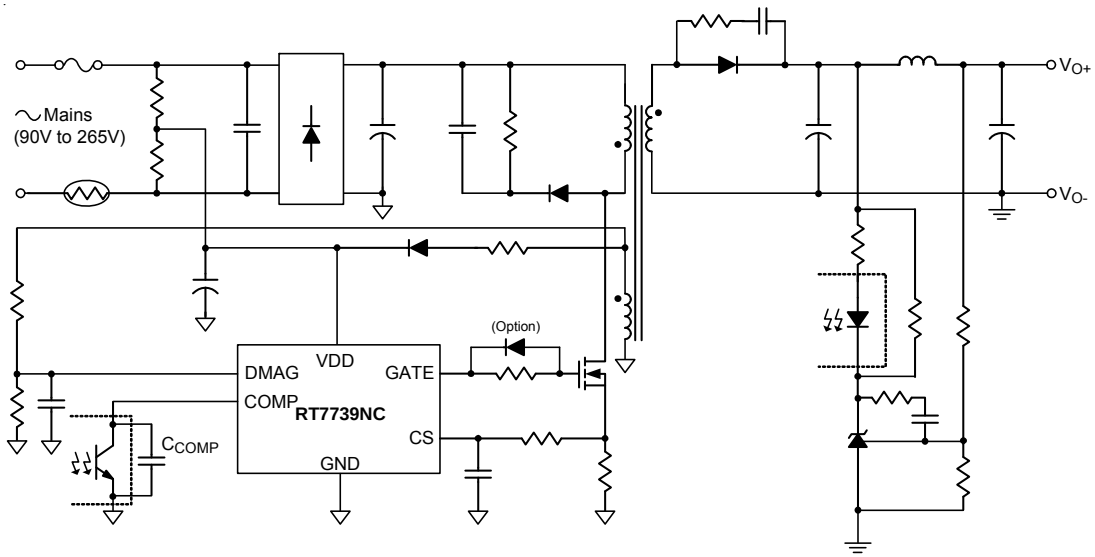

Copyright ©2022 Richtek Technology Corporation. All rights reserved. RICHTEK is a registered trademark of Richtek Technology Corporation.