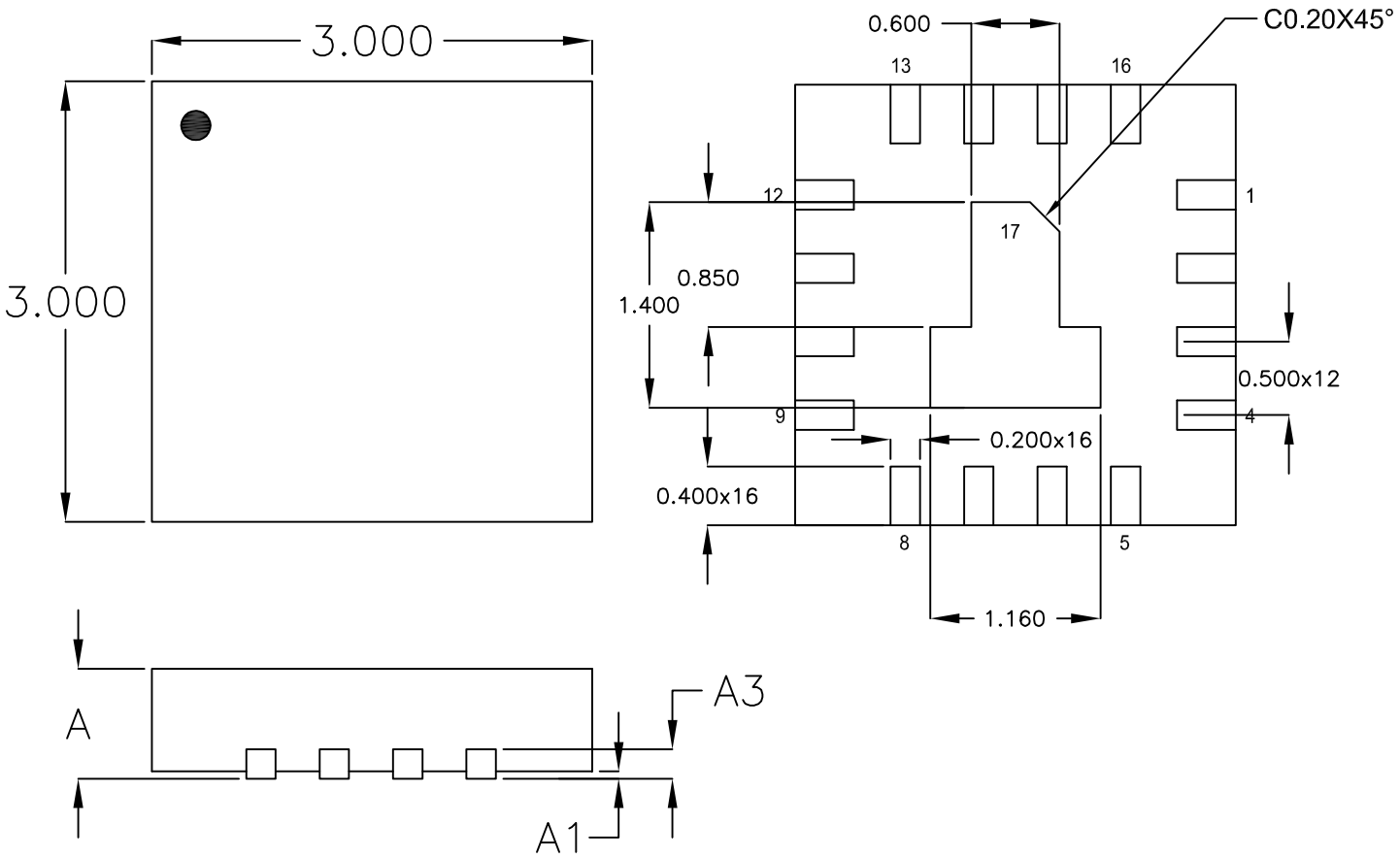

Symbol	Dimensions In Millimeters		Dimensions In Inches	
	Min	Max	Min	Max
A	0.700	0.800	0.028	0.031
A1	0.000	0.050	0.000	0.002
A3	0.175	0.250	0.007	0.010

Tolerance
±0.050

RICHTEK
立錡科技股份有限公司

SCALE: 20:1

DWG TITLE: PACKAGE OUTLINE DRAWING

WQFN3x3-17(FC)